ohmic instruments co.

508 August St. Easton, MD
21601
Voice: (410) 820-5111
Fax: (410) 822-9633
www.ohmicinstruments.com

UPS-600

RESISTIVE RELATIVE HUMIDITY SENSOR APPLICATION NOTES

© 2006 Ohmic Instruments Company, Easton, MD

UPS-600man.PUB Rev. 0 2/27/06

UPS-600 PRECAUTIONS

DC Voltage:
Never apply a DC voltage to the UPS-600. Only a symmetrical AC excitation voltage under 6V AC should be used. The nominal frequency should be between 33 and 1000Hz. The excitation can be a saw tooth, square, or sine wave with no DC bias. DC voltage (including DC pulses) will polarize the sensor, resulting in an irreversible shift. Never connect the sensor to an ohmmeter.

Condensation, Fog, Mist or Liquid Water:
The polymer coating of the UPS-600 allows it to be exposed to condensation with recovery after the sensor dries out. The dry out period may take several minutes; however, there will not be a permanent shift in the impedance. Air movement facilitates faster dry out. Immersion in water or any other liquid is not recommended.

Temperature Limits:
The operating temperature limit for the UPS-600 is 32°F to +122°F.

Chemical Vapors:
Alcohols and other polar compounds typically cause a temporary shift. Reactive chemicals such as sulfides, halogens, mercury vapor, acids and ketones should be avoided. Hydrocarbons or oil mist tend to condense as a varnish which slows the response time

Physical Contaminants:
When used in environments with dust and oil mist, a filter must be utilized. The UPS-600 may be used at high static pressures (>6000 psi). High absolute vacuum should be avoided.

Installation of Sensors:
Sensors must be hand soldered. A heat sink should be used on the sensor legs when soldering to prevent excessive heat from reaching the pad on the sensor body. Carefully clean solder excess with a solder cleaner, but do not get any cleaner on the sensor itself.

UPS-600 RESISTIVE HUMIDITY SENSORS

Temperature Compensation
The average coefficient for temperature compensation of the UPS-500 sensor works out to -0.7% RH/ °C (-0.4% RH/ °F). The correction factor is computed with the expression:

$$C = -0.7(T-25)$$

C = the correction factor in percent to be algebraically added.
T = the temperature in °C.

$$C = -0.4(T-77)$$

C = the correction factor in percent to be algebraically added.
T = the temperature in °F.

For example: A sensor in an environmental condition of 35°C and 50% RH provides an impedance of 18.5KΩ. This impedance with reference to 25°C equals about 57% RH, therefore 7% must be subtracted to obtain the correct reading. Likewise a sensor in an environmental condition of 15°C and 50% RH will read an impedance of 80.9KΩ. This impedance when referenced to 25°C equals about 43% RH, therefore 7% must be added.

The temperature coefficient is optimized for the median %RH and temperature range between 30 and 70% RH and 15 to 35°C. When the sensor is operated outside these limits the accuracy of the coefficient decreases.

UPS-600 Equation

With microprocessor-based circuitry an alternative method of converting the sensor's impedance to %RH with respect to temperature is expressed as:

$$\%RH = A(CZ)^{\frac{T+459.7}{D(T+459.7)+B}}$$

OR: %RH = A{(CZ)^[(T+459.7)/(D(T+459.7)+B)]}

Z = the impedance of the UPS-600 sensor in MΩ.
A, **B**, **C**, **D** = constants for specific impedance ranges (see table below).
T = dry bulb temperature in °F.

Z in MΩ	A	B	C	D
0.4 < Z	5.587129	-5315.366	192689.2	5.895
0.005 < Z <= 0.4	2.269574	-7781.989	74643.52	9.2477
Z <= 0.005	6.385429	-4788.52	189596900	2.5813

The equation is valid over the temperature range of 41 to 113°F (5 to 45°C). Agreement to the empirical data is about 2% from 25 to 90% RH and 3% from 10 to 25% RH.

5°C

UPS-600 DATA CHARTS

%RH	OHMS	° C		%RH	OHMS	° C		%RH	OHMS	° C
10	919.16E+6	5		37	1.91E+6	5		64	38.68E+3	5
11	586.12E+6	5		38	1.68E+6	5		65	35.09E+3	5
12	388.68E+6	5		39	1.49E+6	5		66	31.87E+3	5
13	266.37E+6	5		40	1.32E+6	5		67	28.99E+3	5
14	187.73E+6	5		41	1.18E+6	5		68	26.41E+3	5
15	135.55E+6	5		42	1.05E+6	5		69	24.09E+3	5
16	99.95E+6	5		43	939.44E+3	5		70	22.01E+3	5
17	75.07E+6	5		44	842.82E+3	5		71	20.13E+3	5
18	57.32E+6	5		45	757.99E+3	5		72	18.43E+3	5
19	44.41E+6	5		46	683.28E+3	5		73	16.90E+3	5
20	34.86E+6	5		47	617.31E+3	5		74	15.51E+3	5
21	27.68E+6	5		48	558.91E+3	5		75	14.25E+3	5
22	22.23E+6	5		49	507.07E+3	5		76	13.11E+3	5
23	18.02E+6	5		50	460.94E+3	5		77	12.08E+3	5
24	14.74E+6	5		51	419.80E+3	5		78	11.14E+3	5
25	12.16E+6	5		52	142.93E+3	5		79	10.28E+3	5
26	10.10E+6	5		53	126.78E+3	5		80	9.50E+3	5
27	8.45E+6	5		54	112.71E+3	5		81	8.78E+3	5
28	7.12E+6	5		55	100.41E+3	5		82	8.13E+3	5
29	6.03E+6	5		56	89.65E+3	5		83	7.53E+3	5
30	5.14E+6	5		57	80.20E+3	5		84	6.98E+3	5
31	4.40E+6	5		58	71.88E+3	5		85	6.48E+3	5
32	3.79E+6	5		59	64.55E+3	5		86	6.02E+3	5
33	3.28E+6	5		60	58.07E+3	5		87	5.60E+3	5
34	2.85E+6	5		61	52.33E+3	5		88	5.21E+3	5
35	2.48E+6	5		62	47.24E+3	5		89	4.99E+3	5
36	2.17E+6	5		63	42.71E+3	5		90	4.61E+3	5

UPS-600 DATA CHARTS

15°C

%RH	OHMS	° C		%RH	OHMS	° C		%RH	OHMS	° C
10	208.80E+6	15		37	702.51E+3	15		64	19.54E+3	15
11	137.90E+6	15		38	625.53E+3	15		65	17.87E+3	15
12	94.43E+6	15		39	558.66E+3	15		66	16.37E+3	15
13	66.65E+6	15		40	500.37E+3	15		67	15.01E+3	15
14	48.27E+6	15		41	449.38E+3	15		68	13.79E+3	15
15	35.75E+6	15		42	404.63E+3	15		69	12.68E+3	15
16	27.00E+6	15		43	192.74E+3	15		70	11.67E+3	15
17	20.74E+6	15		44	168.86E+3	15		71	10.75E+3	15
18	16.17E+6	15		45	148.37E+3	15		72	9.92E+3	15
19	12.78E+6	15		46	130.74E+3	15		73	9.16E+3	15
20	10.22E+6	15		47	115.52E+3	15		74	8.47E+3	15
21	8.27E+6	15		48	102.34E+3	15		75	7.84E+3	15
22	6.75E+6	15		49	90.89E+3	15		76	7.27E+3	15
23	5.56E+6	15		50	80.91E+3	15		77	6.74E+3	15
24	4.62E+6	15		51	72.20E+3	15		78	6.26E+3	15
25	3.87E+6	15		52	64.56E+3	15		79	5.82E+3	15
26	3.26E+6	15		53	57.86E+3	15		80	5.41E+3	15
27	2.77E+6	15		54	51.96E+3	15		81	5.04E+3	15
28	2.36E+6	15		55	46.75E+3	15		82	4.47E+3	15
29	2.03E+6	15		56	42.15E+3	15		83	4.12E+3	15
30	1.75E+6	15		57	38.06E+3	15		84	3.81E+3	15
31	1.52E+6	15		58	34.44E+3	15		85	3.52E+3	15
32	1.32E+6	15		59	31.21E+3	15		86	3.26E+3	15
33	1.16E+6	15		60	28.33E+3	15		87	3.02E+3	15
34	1.02E+6	15		61	25.76E+3	15		88	2.79E+3	15
35	894.74E+3	15		62	23.46E+3	15		89	2.59E+3	15
36	791.49E+3	15		63	21.40E+3	15		90	2.41E+3	15

25°C

%RH	OHMS	DEG C		%RH	OHMS	DEG C		%RH	OHMS	DEG C
10	52.39E+6	25		37	183.75E+3	25		64	10.34E+3	25
11	35.75E+6	25		38	159.74E+3	25		65	9.53E+3	25
12	25.23E+6	25		39	139.37E+3	25		66	8.79E+3	25
13	18.30E+6	25		40	122.01E+3	25		67	8.13E+3	25
14	13.60E+6	25		41	107.17E+3	25		68	7.52E+3	25
15	10.31E+6	25		42	94.43E+3	25		69	6.96E+3	25
16	7.96E+6	25		43	83.45E+3	25		70	6.46E+3	25
17	6.24E+6	25		44	73.96E+3	25		71	5.99E+3	25
18	4.97E+6	25		45	65.73E+3	25		72	5.57E+3	25
19	4.00E+6	25		46	58.56E+3	25		73	5.18E+3	25
20	3.25E+6	25		47	52.31E+3	25		74	4.54E+3	25
21	2.68E+6	25		48	46.83E+3	25		75	4.17E+3	25
22	2.22E+6	25		49	42.03E+3	25		76	3.83E+3	25
23	1.86E+6	25		50	37.80E+3	25		77	3.53E+3	25
24	1.57E+6	25		51	34.06E+3	25		78	3.25E+3	25
25	1.33E+6	25		52	30.76E+3	25		79	3.00E+3	25
26	1.14E+6	25		53	27.83E+3	25		80	2.77E+3	25
27	977.27E+3	25		54	25.23E+3	25		81	2.56E+3	25
28	844.69E+3	25		55	22.91E+3	25		82	2.37E+3	25
29	733.84E+3	25		56	20.84E+3	25		83	2.19E+3	25
30	640.59E+3	25		57	18.99E+3	25		84	2.03E+3	25
31	561.69E+3	25		58	17.33E+3	25		85	1.88E+3	25
32	494.56E+3	25		59	15.85E+3	25		86	1.75E+3	25
33	335.11E+3	25		60	14.51E+3	25		87	1.63E+3	25
34	286.48E+3	25		61	13.30E+3	25		88	1.51E+3	25
35	246.03E+3	25		62	12.21E+3	25		89	1.41E+3	25
36	212.19E+3	25		63	11.23E+3	25		90	1.31E+3	25

UPS-600 DATA CHARTS

35°C

%RH	OHMS	DEG C		%RH	OHMS	DEG C		%RH	OHMS	DEG C
10	14.38E+6	35		37	78.27E+3	35		64	5.70E+3	35
11	10.12E+6	35		38	68.90E+3	35		65	5.29E+3	35
12	7.34E+6	35		39	60.85E+3	35		66	4.86E+3	35
13	5.47E+6	35		40	53.91E+3	35		67	4.44E+3	35
14	4.16E+6	35		41	47.91E+3	35		68	4.06E+3	35
15	3.22E+6	35		42	42.70E+3	35		69	3.71E+3	35
16	2.54E+6	35		43	38.15E+3	35		70	3.40E+3	35
17	2.03E+6	35		44	34.18E+3	35		71	3.12E+3	35
18	1.65E+6	35		45	30.70E+3	35		72	2.87E+3	35
19	1.35E+6	35		46	27.64E+3	35		73	2.64E+3	35
20	1.12E+6	35		47	24.94E+3	35		74	2.43E+3	35
21	932.39E+3	35		48	22.55E+3	35		75	2.24E+3	35
22	785.41E+3	35		49	20.43E+3	35		76	2.07E+3	35
23	666.67E+3	35		50	18.55E+3	35		77	1.91E+3	35
24	569.85E+3	35		51	16.87E+3	35		78	1.77E+3	35
25	490.21E+3	35		52	15.38E+3	35		79	1.64E+3	35
26	422.91E+3	35		53	14.04E+3	35		80	1.52E+3	35
27	353.08E+3	35		54	12.84E+3	35		81	1.41E+3	35
28	296.73E+3	35		55	11.76E+3	35		82	1.31E+3	35
29	250.89E+3	35		56	10.79E+3	35		83	1.21E+3	35
30	213.35E+3	35		57	9.91E+3	35		84	1.13E+3	35
31	182.39E+3	35		58	9.12E+3	35		85	1.05E+3	35
32	156.70E+3	35		59	8.41E+3	35		86	979.52E+0	35
33	135.26E+3	35		60	7.76E+3	35		87	913.33E+0	35
34	117.27E+3	35		61	7.17E+3	35		88	852.30E+0	35
35	102.09E+3	35		62	6.63E+3	35		89	795.97E+0	35
36	89.22E+3	35		63	6.14E+3	35		90	743.93E+0	35

45°C

%RH	OHMS	DEG C		%RH	OHMS	DEG C		%RH	OHMS	DEG C
10	4.28E+6	45		37	35.18E+3	45		64	3.14E+3	45
11	3.10E+6	45		38	31.33E+3	45		65	2.87E+3	45
12	2.31E+6	45		39	27.99E+3	45		66	2.63E+3	45
13	1.76E+6	45		40	25.08E+3	45		67	2.41E+3	45
14	1.37E+6	45		41	22.53E+3	45		68	2.21E+3	45
15	1.08E+6	45		42	20.29E+3	45		69	2.03E+3	45
16	871.65E+3	45		43	18.32E+3	45		70	1.87E+3	45
17	709.88E+3	45		44	16.58E+3	45		71	1.72E+3	45
18	584.96E+3	45		45	15.04E+3	45		72	1.59E+3	45
19	487.10E+3	45		46	13.67E+3	45		73	1.47E+3	45
20	409.43E+3	45		47	12.45E+3	45		74	1.36E+3	45
21	347.08E+3	45		48	11.37E+3	45		75	1.25E+3	45
22	335.93E+3	45		49	10.39E+3	45		76	1.16E+3	45
23	276.98E+3	45		50	9.52E+3	45		77	1.08E+3	45
24	230.26E+3	45		51	8.74E+3	45		78	1.00E+03	45
25	192.87E+3	45		52	8.03E+3	45		79	928.73	45
26	162.68E+3	45		53	7.39E+3	45		80	863.60	45
27	138.10E+3	45		54	6.82E+3	45		81	803.77	45
28	117.93E+3	45		55	6.29E+3	45		82	748.74	45
29	101.27E+3	45		56	5.82E+3	45		83	698.07	45
30	87.41E+3	45		57	5.39E+3	45		84	651.39	45
31	75.82E+3	45		58	5.00E+3	45		85	608.32	45
32	66.06E+3	45		59	4.64E+3	45		86	568.55	45
33	57.80E+3	45		60	4.55E+3	45		87	531.80	45
34	50.77E+3	45		61	4.14E+3	45		88	497.81	45
35	44.77E+3	45		62	3.77E+3	45		89	466.34	45
36	39.62E+3	45		63	3.44E+3	45		90	437.17	45

SAMPLE CIRCUIT DIAGRAM.

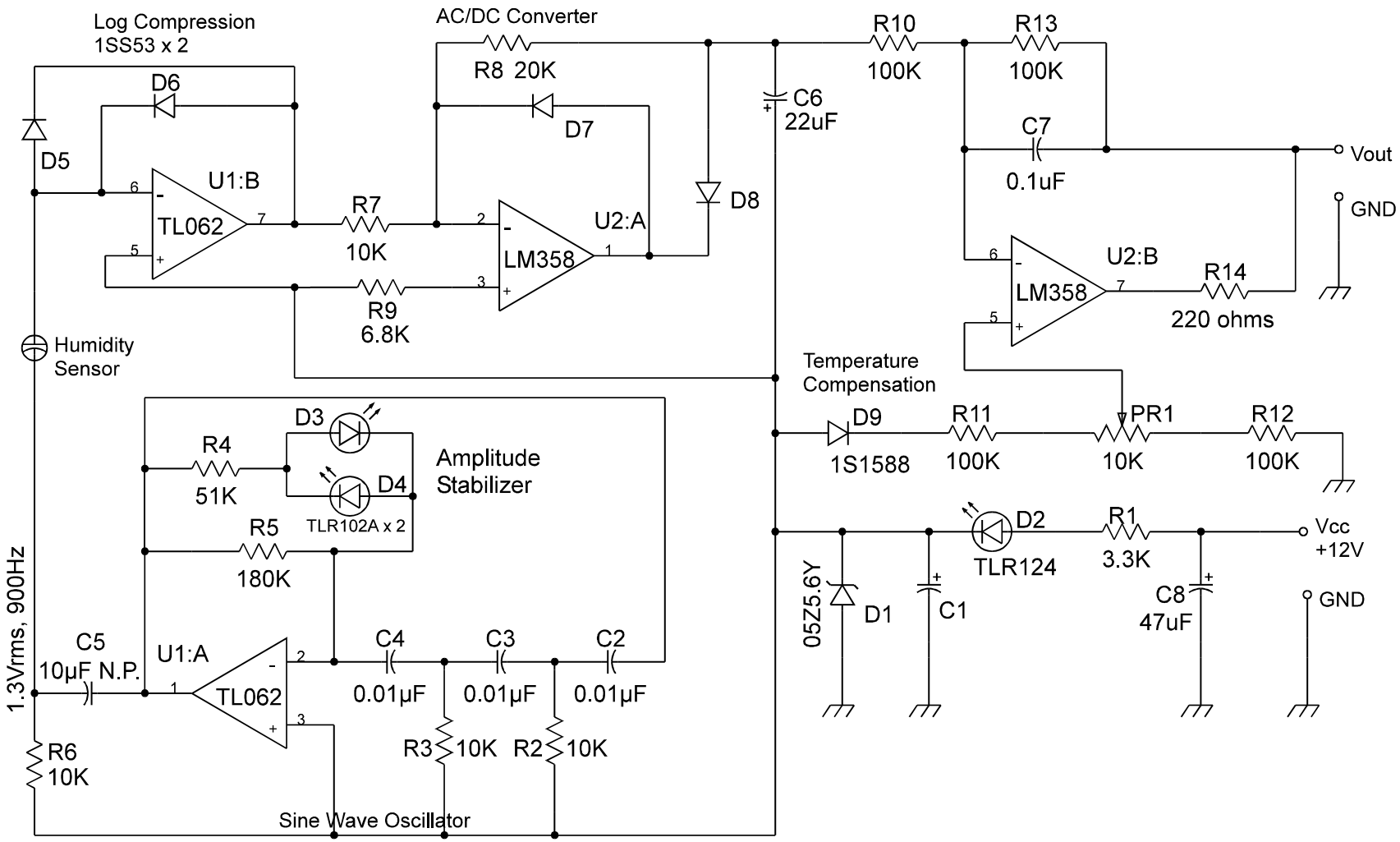

FUNCTIONAL DESCRIPTION OF EXAMPLE HUMIDITY MEASURING CIRCUIT

U1:A generates a sine wave of 900Hz, 1.3V rms. D3 and D4 use the forward voltage of the LED to stabilize the amplitude. U1:B uses the forward voltage-current characteristics of the silicon diode to produce a logarithmic signal. The current change resulting from the impedance change of the sensor is compressed logarithmically and yields a voltage. U1 needs to be an FET input type, since the impedance of the sensor exceeds 100 megohms at low humidity.

The impedance of the sensor is affected by both humidity and temperature. Another method of temperature compensation is to use a microprocessor to run the sensor's equation.